GENERAL NOTES:

1. Cross Slopes and Grades:

   A. Sidewalk, ramp, and landing slopes (i.e. 0.02, 0.05, and 1:12) shown in this Index are maximums. With approval of the Engineer, provide the minimum feasible slope where the requirements cannot be met.

   B. Landings must have cross-slopes less than or equal to 0.02 in any direction.

   C. Maintain a single longitudinal slope along each side of the curb ramp. Ramp slopes are not required to exceed 15 feet in length.

   D. Joints permitted at the location of Slope Breaks. Otherwise locate joints in accordance with Index 522-001. No joints are permitted within the ramp portion of the Curb Ramp.

2. Grade Breaks:

   Grade breaks at the top and bottom of ramps must be parallel to each other and perpendicular to the direction of the ramp slope.

3. Curb, Curb and Gutter and/or Sidewalk:

   A. Refer to Index 522-001 for concrete thickness and sidewalk details.

   B. Remove any existing curb, curb and gutter, or sidewalk to the nearest joint beyond the curb transition or to the extent that no remaining section is less than 5 feet long.

4. Curb Ramp Alpha-Identification:

   A. Sidewalk curb ramp alpha-identifications (e.g. CR-A) are provided for reference purposes in the Plans.

   B. Alpha-identifications CR-I and CR-J are intentionally omitted.

5. Detectable Warnings:

   A. Install detectable warnings in accordance with Specification 527.

   B. Place detectable warnings across the full width of the ramp or landing, to a minimum depth of 2 feet measured perpendicular to the curb line and no greater than 5 feet from the back of the curb or edge of pavement.

   C. If detectable warnings are shown in the Plans on slopes greater than 5%, align the truncated domes with the centerline of the ramp; otherwise, the truncated domes are not required to be aligned.

6. Detectable Warnings - Acceptance Criteria:

   A. Color and texture shall be complete and uniform.

   B. 90% of individual truncated domes shall be in accordance with the Americans with Disabilities Act Standards for Transportation Facilities, Section 705.

   C. There shall be no more than 4 non-compliant domes in any one square foot.

   D. Non-compliant domes shall not be adjacent to other non-compliant domes.

   E. Surfaces shall not deviate more than 0.10" from a true plane.

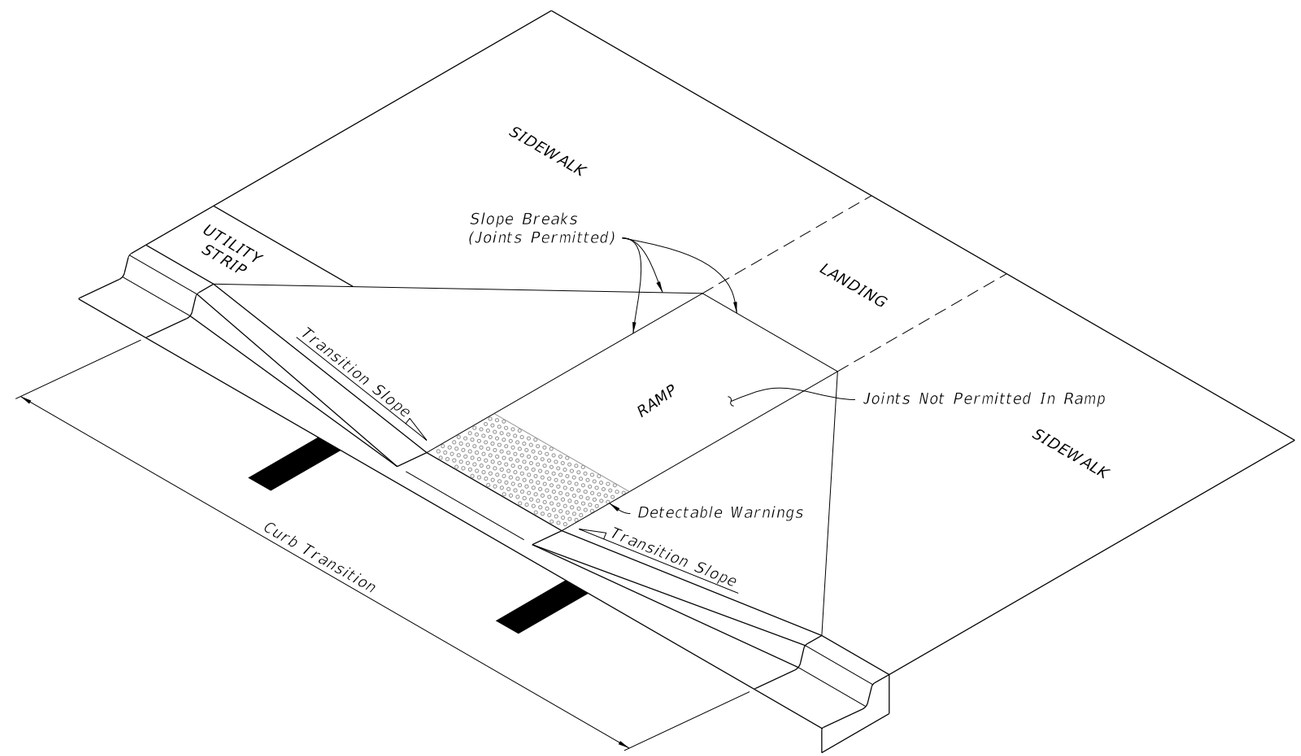

CURB RAMP NOMENCLATURE

10/18/2018 11:18:58 AM

LAST REVISION	REVISION	DESCRIPTION:	FDOT FY 2019-20 STANDARD PLANS	DETECTABLE WARNINGS AND SIDEWALK CURB RAMPS	INDEX	SHEET
11/01/18					522-002	1 of 8

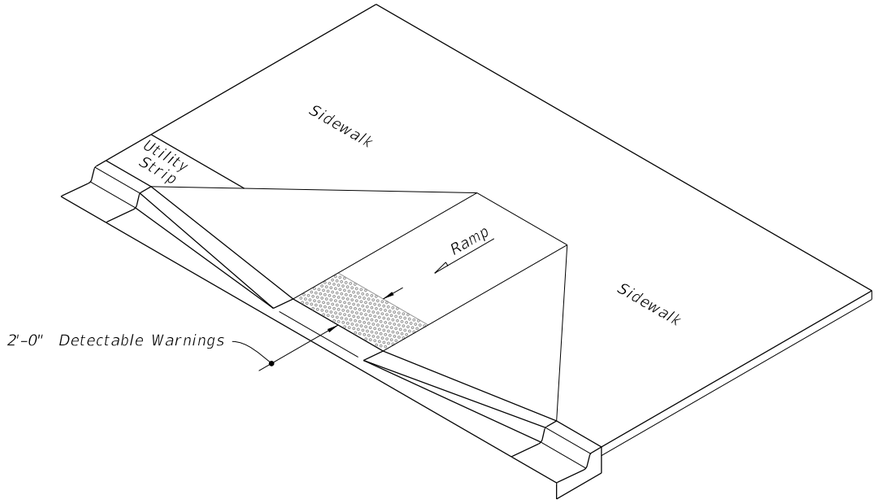

ISOMETRIC VIEW

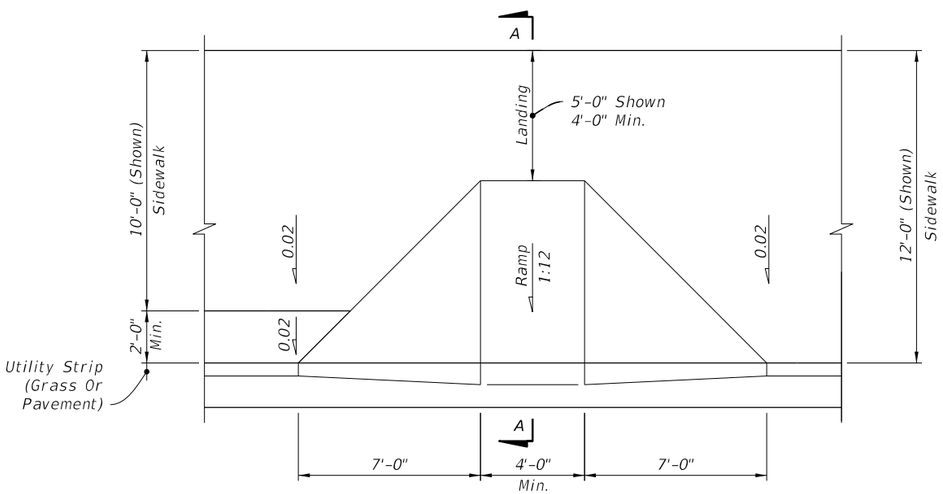

PLAN VIEW

NOTE: For Example of CR-A used in Radial Curb Returns, See Sheet 8.

CR-A

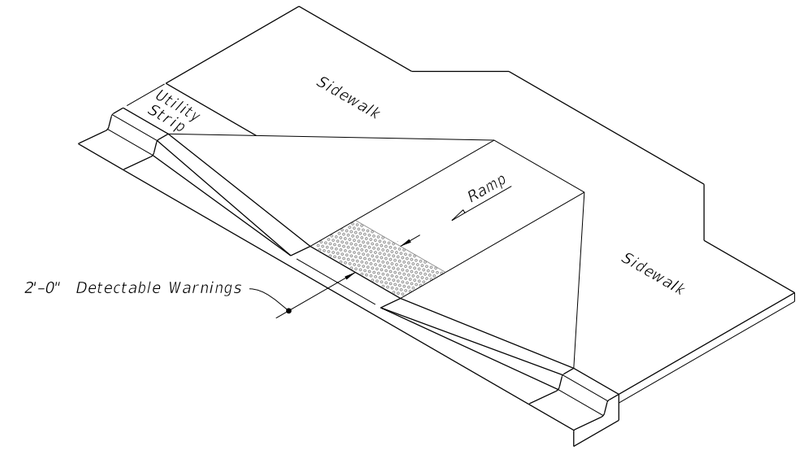

ISOMETRIC VIEW

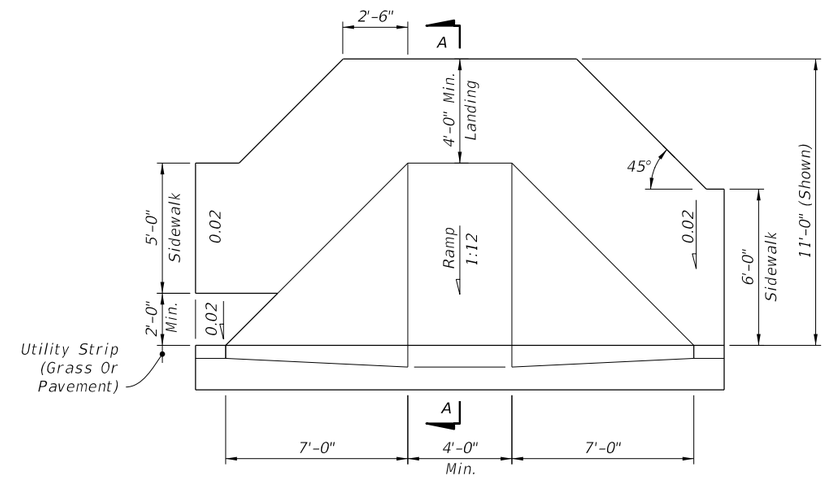

PLAN VIEW

CR-B

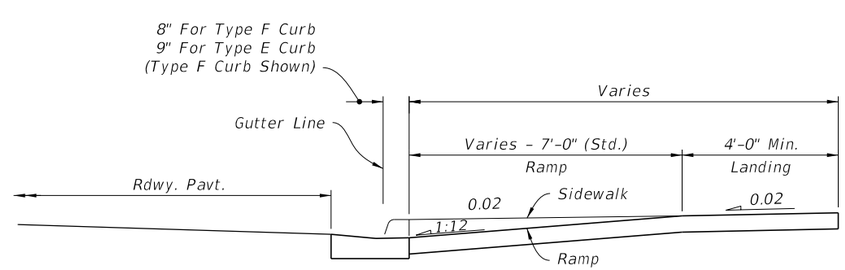

SECTION A-A

SIDEWALK CURB RAMPS CR-A AND CR-B

LAST REVISION	REVISION	DESCRIPTION:				INDEX	SHEET
11/01/18			FDOT	FY 2019-20 STANDARD PLANS	DETECTABLE WARNINGS AND SIDEWALK CURB RAMPS	522-002	2 of 8

10/18/2018 11:18:59 AM

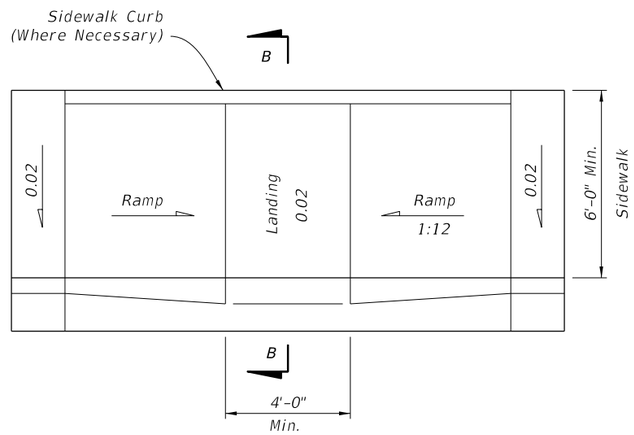

PLAN VIEW

CR-C

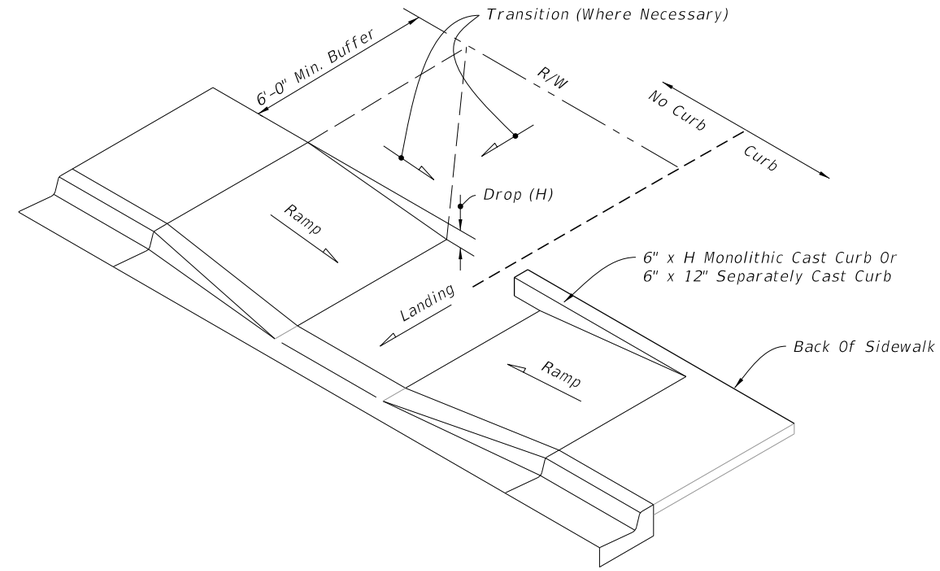

CONSTRUCTION OF SIDEWALK CURB IN CUT SECTIONS

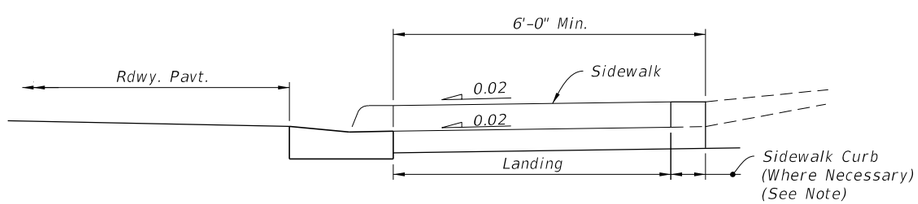

NOTE: For additional information on sidewalk curb construction, see SIDEWALK CURB OPTIONS details.

SECTION B-B

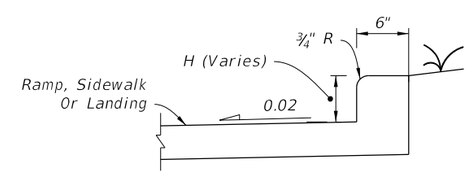

MONOLITHIC CAST CURB

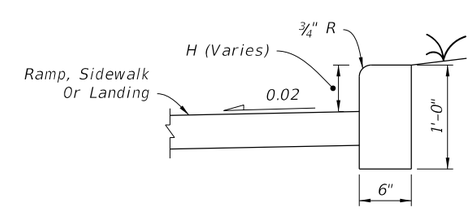

SEPARATELY CAST CURB

SIDEWALK CURB OPTIONS

SIDEWALK CURB RAMPS CR-C AND SIDEWALK CURB

10/18/2018 11:18:59 AM

LAST REVISION	REVISION	DESCRIPTION:				INDEX	SHEET
11/01/18			FDOT	FY 2019-20 STANDARD PLANS	DETECTABLE WARNINGS AND SIDEWALK CURB RAMPS	522-002	3 of 8

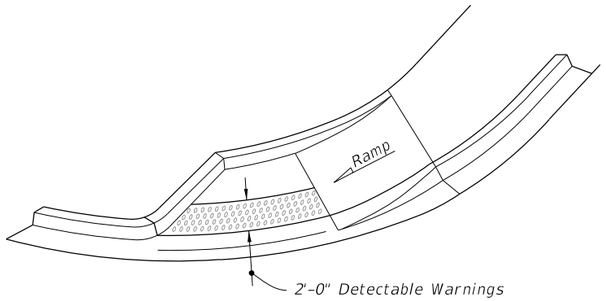

ISOMETRIC VIEW

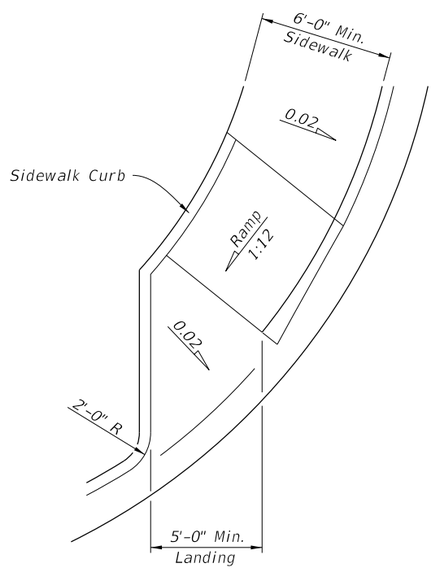

PLAN VIEW

CR-D

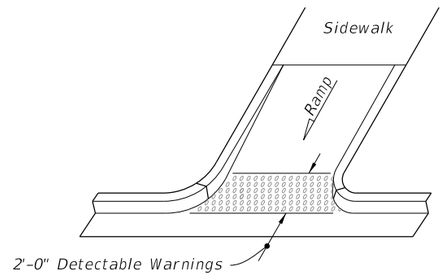

OPTION A

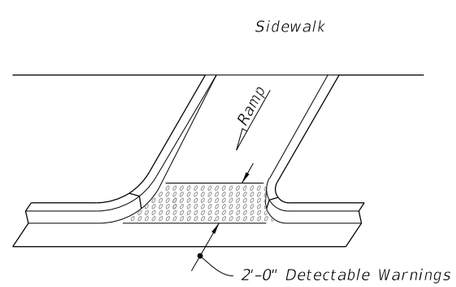

OPTION B

ISOMETRIC VIEW

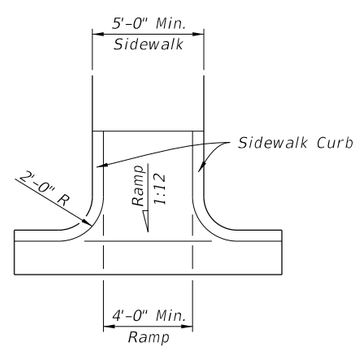

PLAN VIEW

CR-E

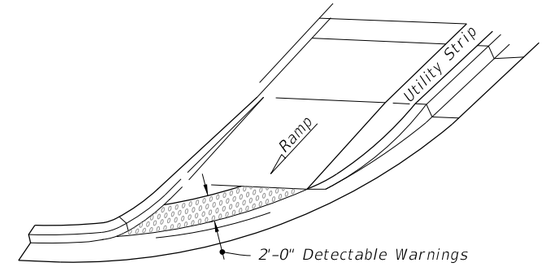

OPTION A

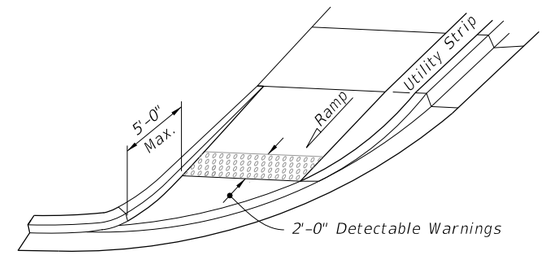

OPTION B

ISOMETRIC VIEW

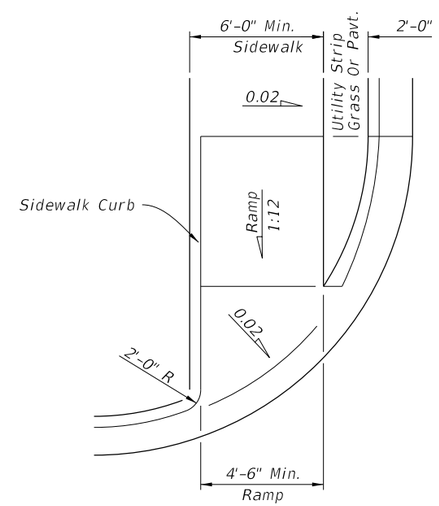

PLAN VIEW

CR-F

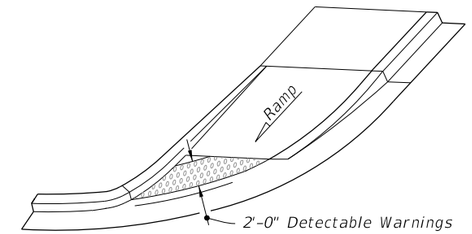

OPTION A

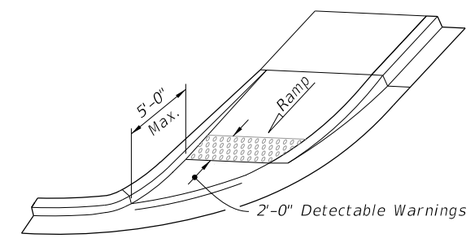

OPTION B

ISOMETRIC VIEW

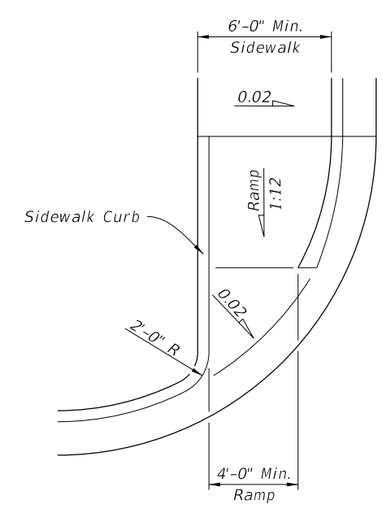

PLAN VIEW

CR-G

SIDEWALK CURB RAMPS CR-D, CR-E, CR-F & CR-G

LAST REVISION	REVISION	DESCRIPTION:			INDEX	SHEET
11/01/18			FDOT FY 2019-20 STANDARD PLANS	DETECTABLE WARNINGS AND SIDEWALK CURB RAMPS	522-002	4 of 8

10/18/2018 11:19:00 AM

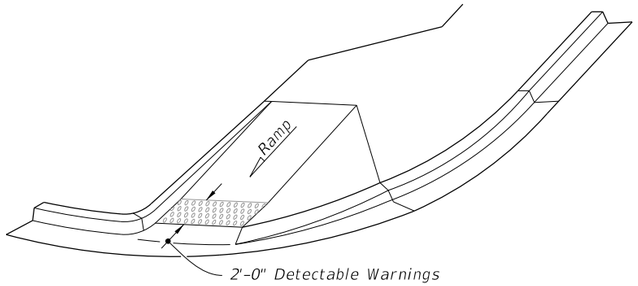

ISOMETRIC VIEW

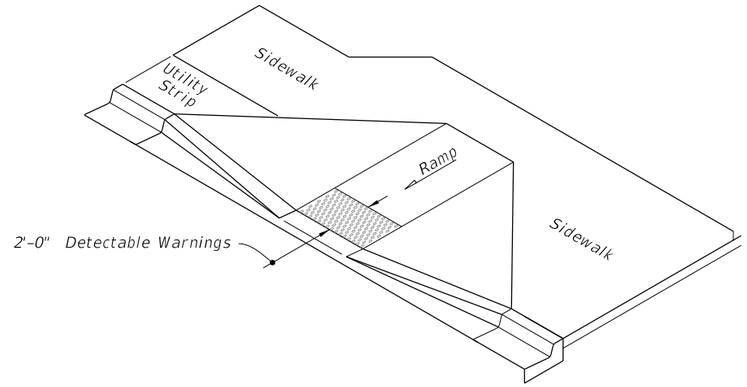

ISOMETRIC VIEW

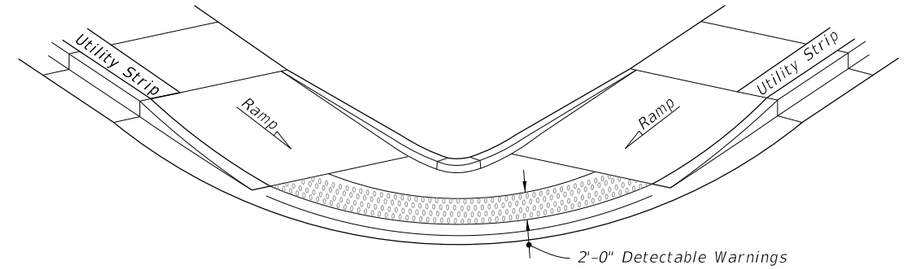

OPTION A

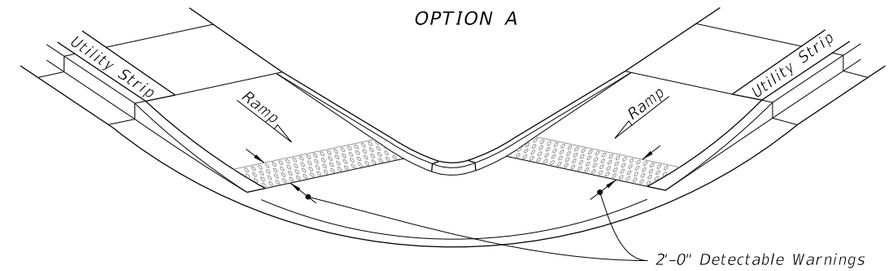

OPTION B

ISOMETRIC VIEW

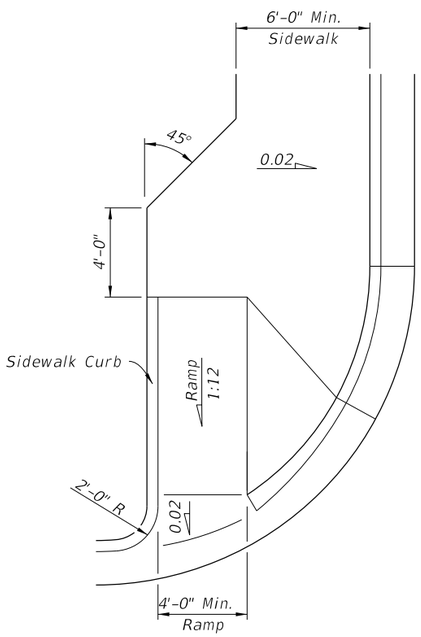

PLAN VIEW

CR-H

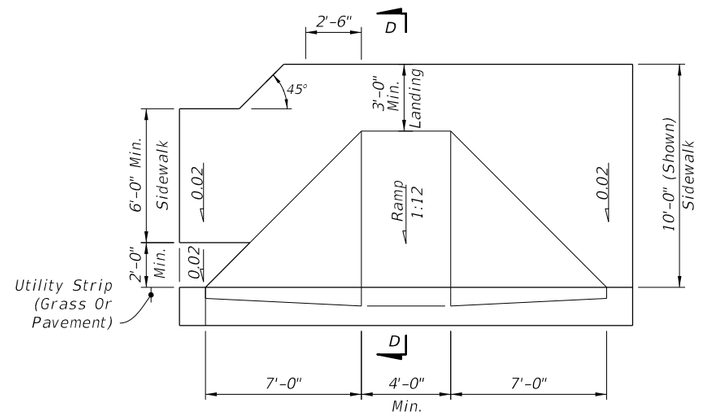

PLAN VIEW

CR-K

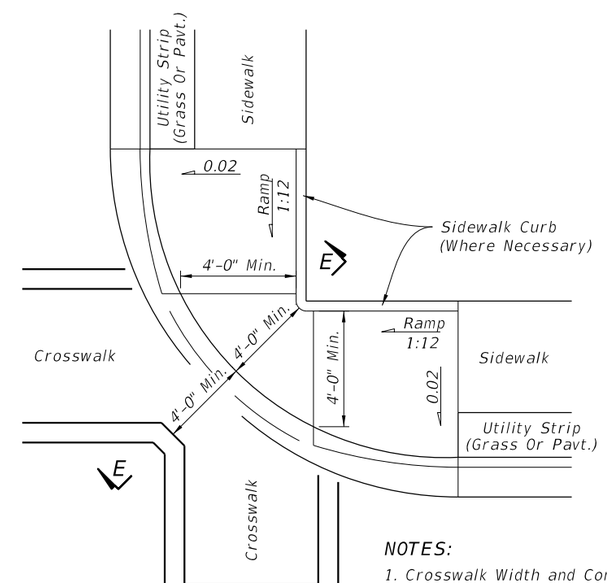

PLAN VIEW

CR-L

NOTES:

1. Crosswalk Width and Configuration Vary; Must Conform to Index 711-001.
2. 15' Radius Curve Shown for CR-L.
3. For additional information on sidewalk curb construction, see SIDEWALK CURB OPTIONS details, on Sheet 3.

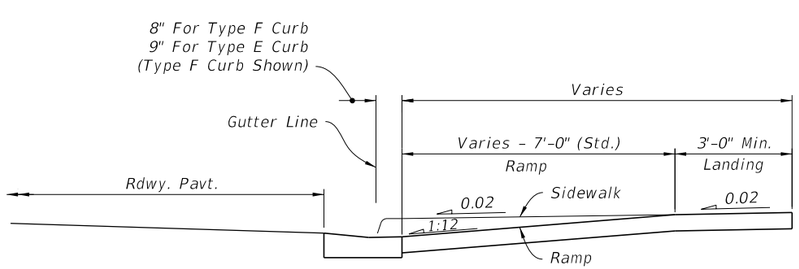

SECTION D-D

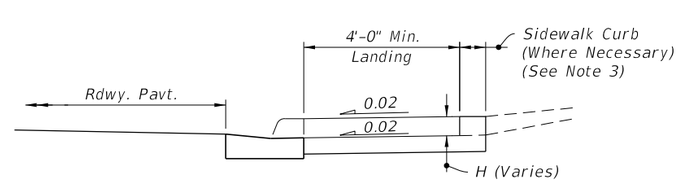

SECTION E-E

SIDEWALK CURB RAMPS CR-H, CR-K & CR-L

LAST REVISION	REVISION	DESCRIPTION:				INDEX	SHEET
11/01/18			FDOT	FY 2019-20 STANDARD PLANS	DETECTABLE WARNINGS AND SIDEWALK CURB RAMPS	522-002	5 of 8

10/18/2018 11:19:00 AM

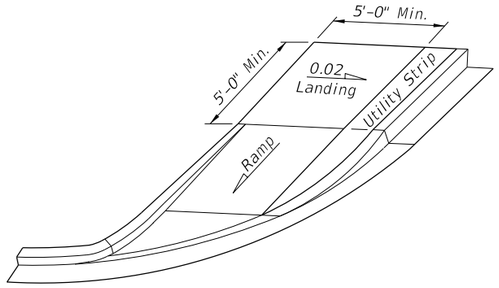

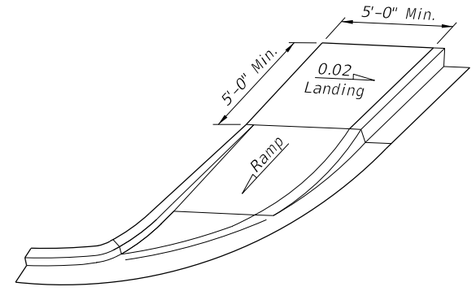

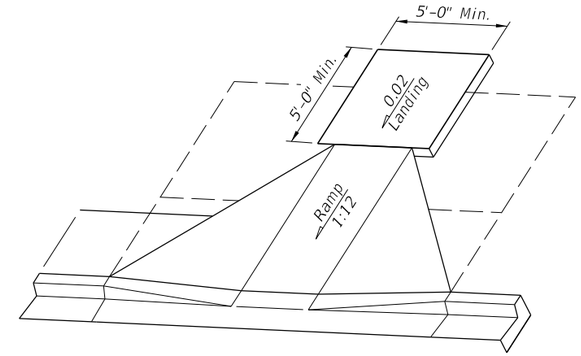

LANDINGS FOR CURB RAMPS WITHOUT SIDEWALKS

(See CR-F, CR-G & CR-K Respectively For Detectable Warning Details/Options)

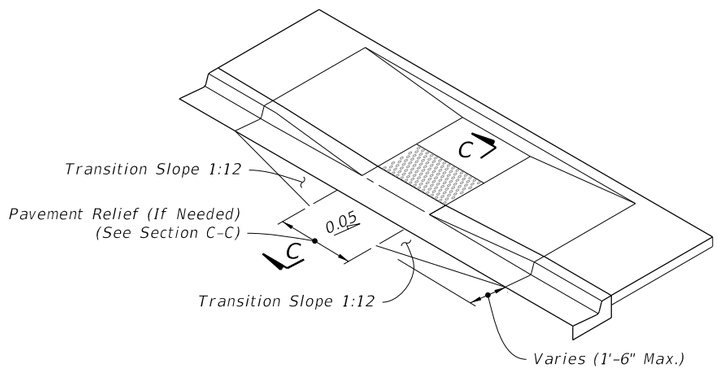

ISOMETRIC VIEW

(CR-C Shown, Other Similar)

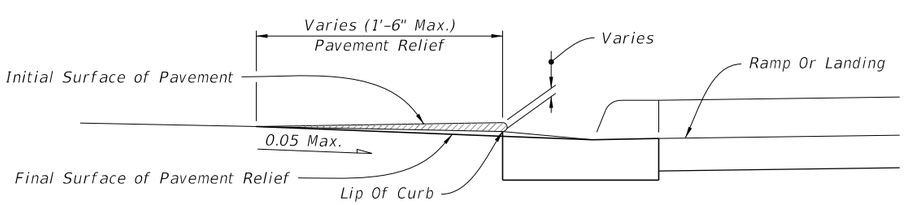

NOTE: Remove Elevated Pavement By Spading And Rolling, Smooth Milling, or Grinding.

SECTION C-C

PAVEMENT RELIEF DETAILS

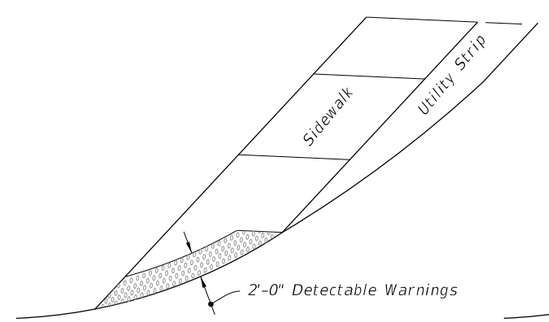

OPTION A

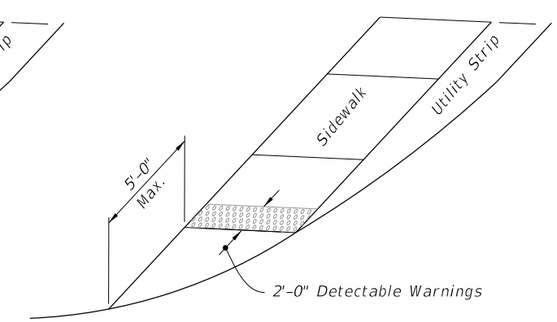

OPTION B

DETECTABLE WARNING ON FLUSH SHOULDER SIDEWALKS

CURB RAMPS WITHOUT SIDEWALKS AND FLUSH SHOULDER SIDEWALKS

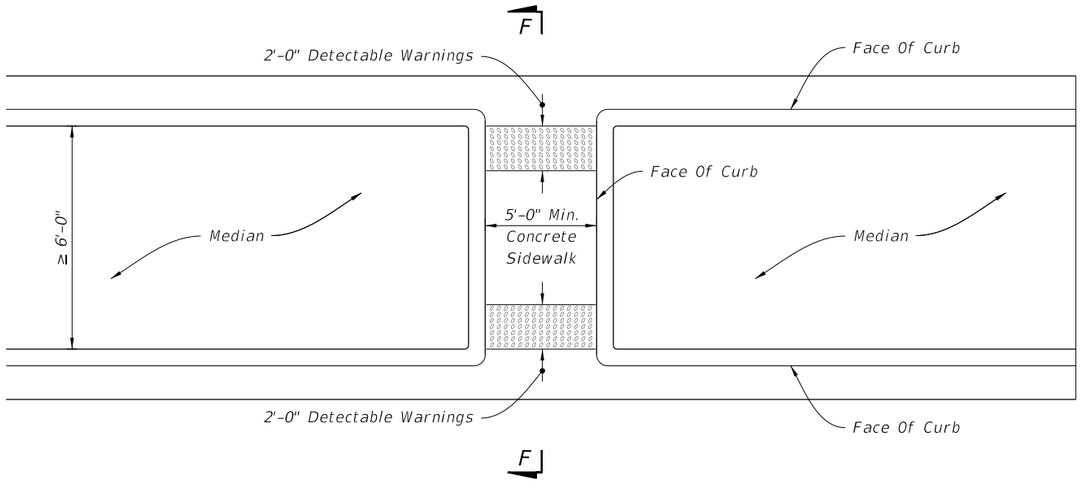

DEPRESSED SIDEWALK

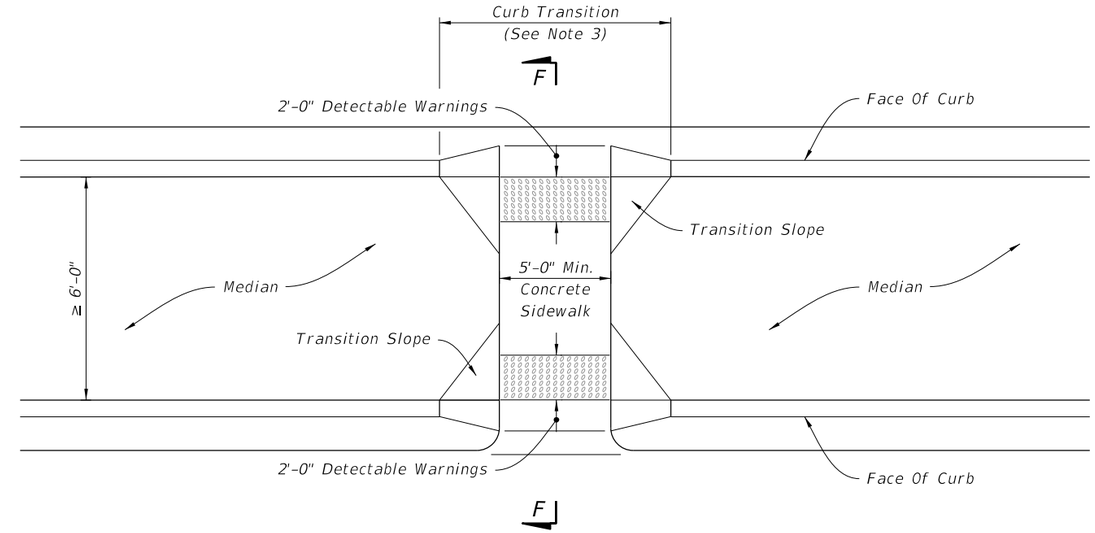

RAISED SIDEWALK

MEDIAN CROSSINGS

NOTES:

1. Cross Slope of the median crossing not to exceed 0.02.

2. Running Slopes:

   A. Slopes ≤ 0.05: For roadway cross sections were the Edge of Pavement elevation is the same for both directions of traffic, the median crossing running slopes (0.02 Typ.) should meet at the centerline of the median. For roadway cross sections with variable Edge of Pavement elevations, or to accommodate other construction in the median, the slopes may intersect off the centerline of the median.

   B. Slopes > 0.05: Provide a median refuge area (landing, 0.02 slope) for crossings with running slopes > 0.05. The refuge area must extend the full width of the crossing and have a minimum length of 5 feet.

3. On existing facilities, remove and reconstruct curb transition for raised sidewalk with ramp.

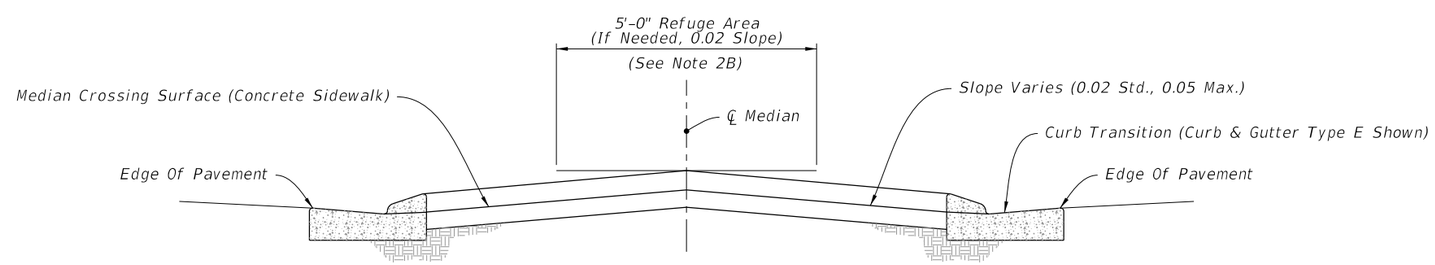

SECTION F-F

MEDIAN CROSSING

LAST REVISION	REVISION	DESCRIPTION:				INDEX	SHEET
11/01/17			FDOT	FY 2019-20 STANDARD PLANS	DETECTABLE WARNINGS AND SIDEWALK CURB RAMPS	522-002	7 of 8

10/18/2018 11:19:02 AM

NOTES:

1. Where crosswalk markings are used, ramps must fall within the crosswalk limits. A clear space of 48" minimum is required at the bottom of the ramp within a marked crosswalk. If crosswalk markings are not present, a clear space of 48" minimum is required at the bottom of the ramp outside of active travel lanes.
2. Crosswalk widths and configurations vary; must conform to Index 711-001.
3. Flangeway Gap may be up to 3" for Freight-only Railways.

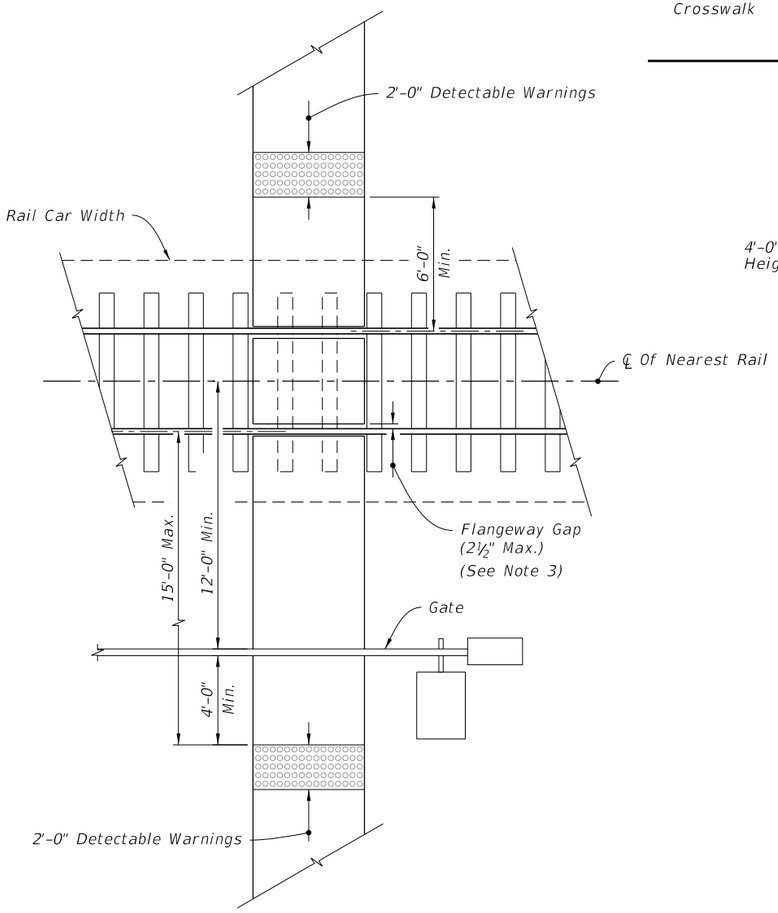

RAILROAD CROSSING

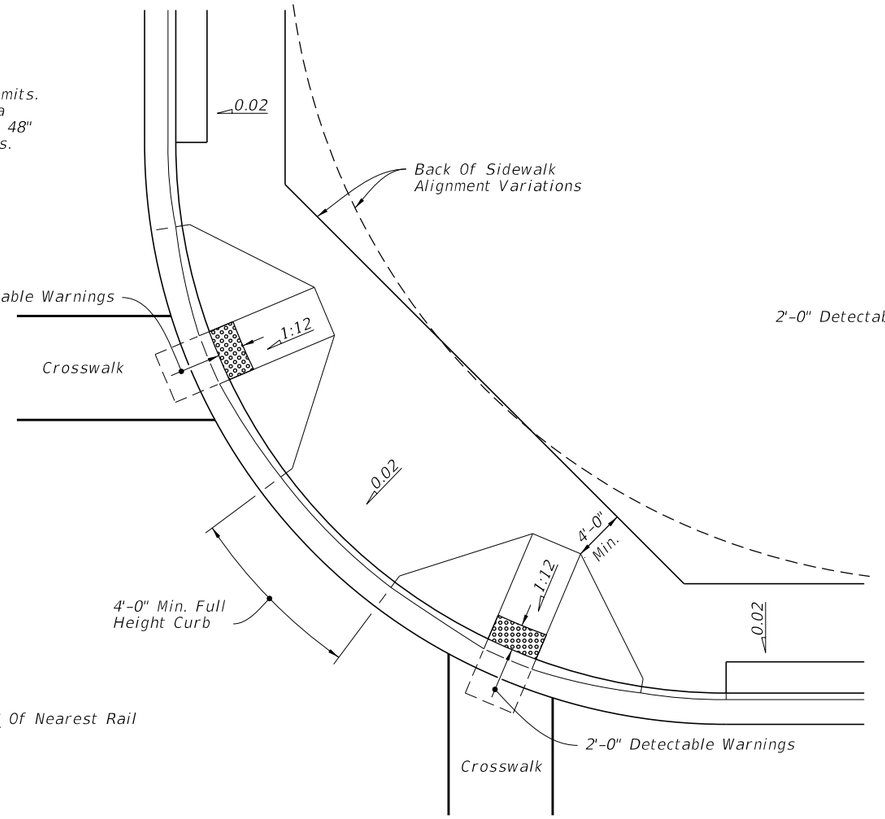

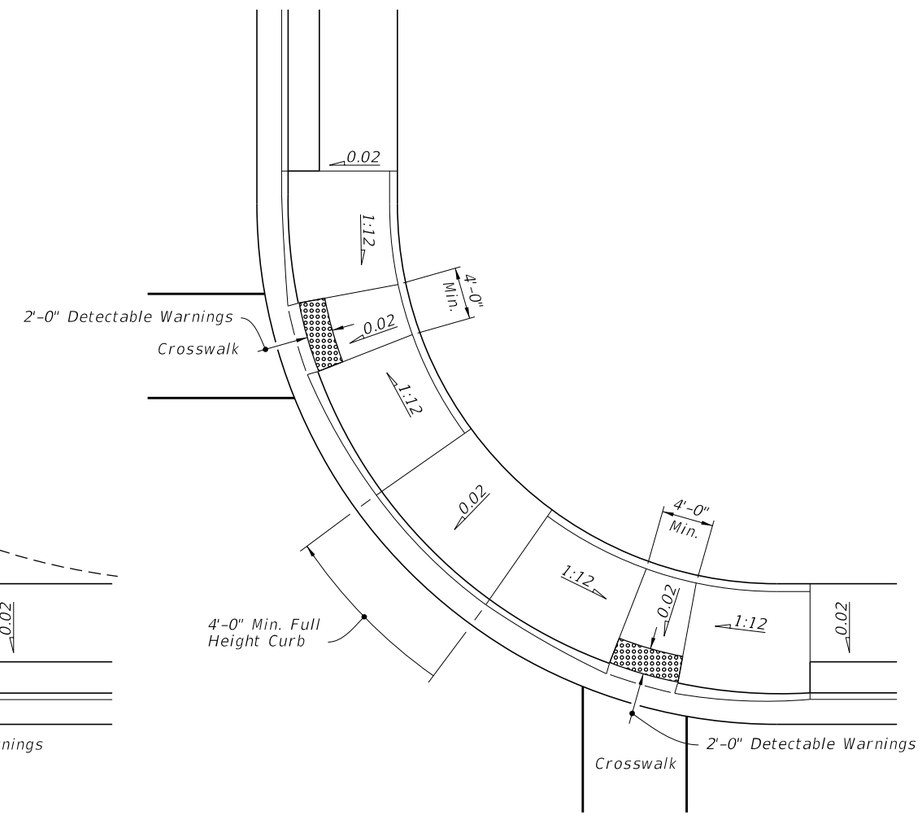

RADIAL SIDEWALK RAMPS

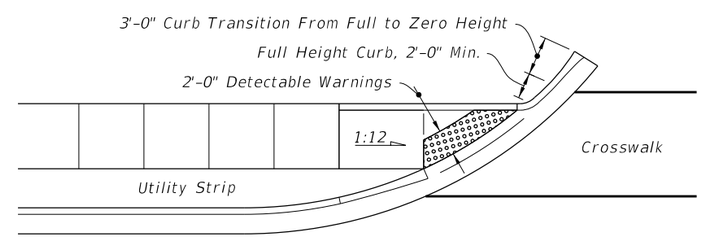

LINEAR SIDEWALK RAMPS

PLACEMENT OF SIDEWALK CURB RAMPS AT CURBED RETURNS (TYP.)

RAILROAD CROSSING AND CURB RAMPS AT CURBED RETURNS

10/18/2018 11:19:02 AM

LAST REVISION	REVISION	DESCRIPTION:			INDEX	SHEET
11/01/17			FDOT FY 2019-20 STANDARD PLANS	DETECTABLE WARNINGS AND SIDEWALK CURB RAMPS	522-002	8 of 8